DEGSON®

DEGSON ELECTRONICS CO.,LTD.

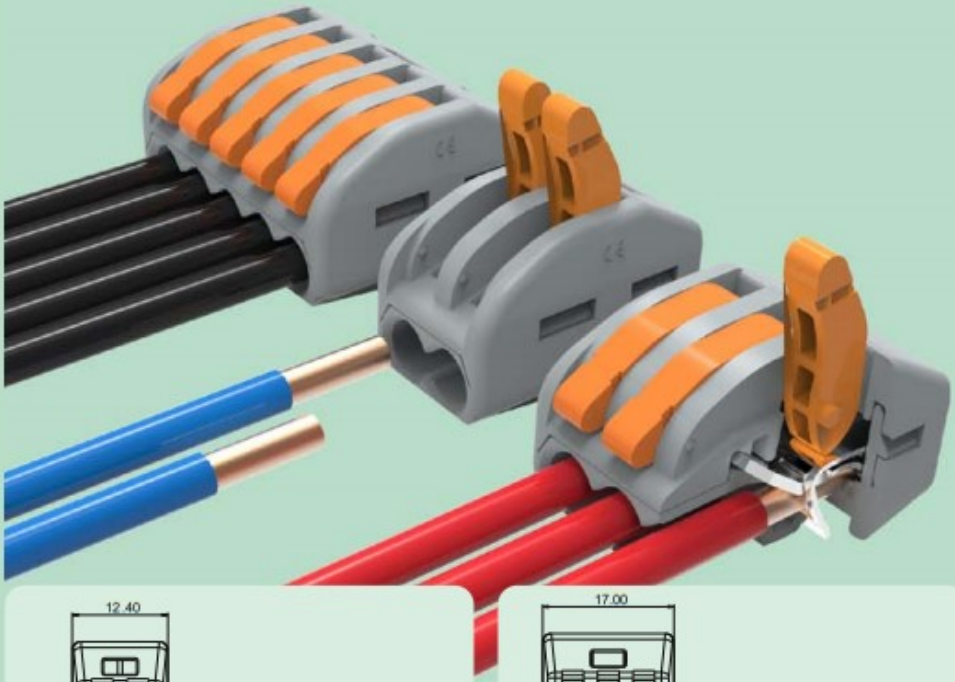

DG223-4.61

- Compact splicing connector;
- with operating levers.

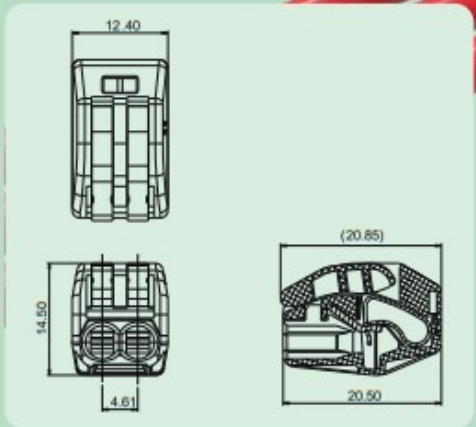

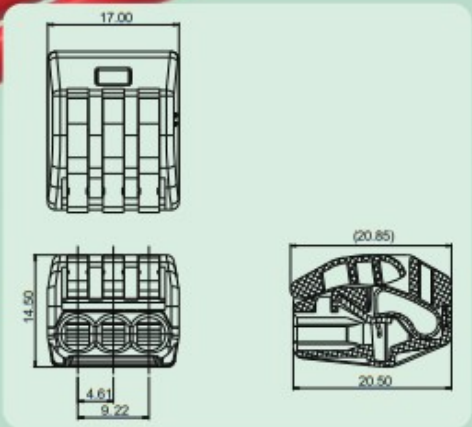

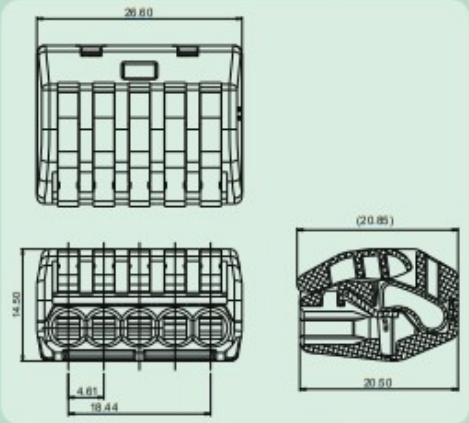

Technical data

APPROVAL: CE

Model	Wire range (AWG/mm²)	Poles	IEC60998 data sheet		UL486C data sheet	
			Rated voltage(V)	Rated current(A)	Rated voltage(V)	Rated currenT(A)
DG223-4.61	28-12/0.2-2.5	02/03/05P	450	24	600	20

Application

Cross reference

DEGSON	Competitor1	Competitor2
DG223-4.61	W/222-41X	-

Packing

Product model	Pcs./Pkt.
DG223-4.61-02P	100
DG223-4.61-03P	100
DG223-4.61-05P	100
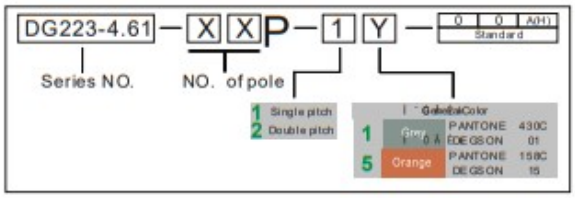
How to order