REV	CONTENT	CHK	DATE
V0.0	CONTENT	LZW	23.10.21

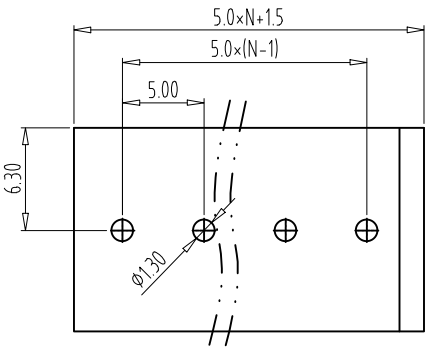

PCB LAYOUT

Electrical :

	UL	IEC
1.Rated Voltage :	300V	250V
2.Rated Current :	8A	15A
3.Wire Range:	26-16AWG	0.2-1.5mm^2

4.Stripping Length : 8mm
5.Withstanding Voltage : AC2000V/1Min.
6.Operating Temperature : -40°C~+105°C
7.RoHS Compliance
8."★" is the key quality control point

GT211V - 5.0 -XXP - X X - 00
① ② ③ ④ ⑤ ⑥

① Sereies NO.

② Pitch

③ Poles
02 02Contacts
03 03Contacts
...
24 24Contacts

④ 1 Single Pitch
2 Double Pitch

⑤ Color: 1 Grey
2 Blue
3 Black
4 Green
5 Orange
6 Red
7 Transparent
8 Yellow
9 White

⑥ Customer Request: 00--Standard(single pin leg)

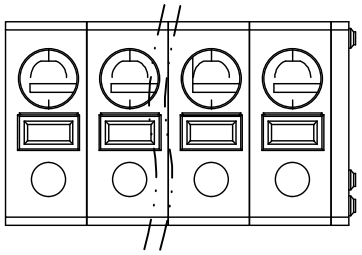

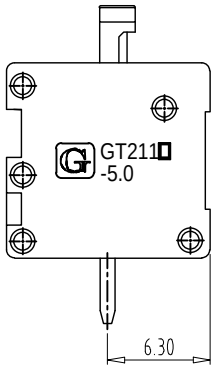

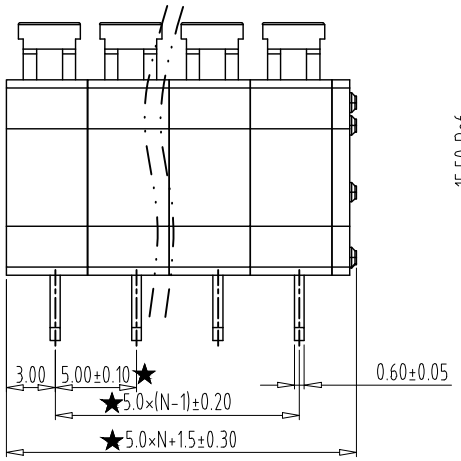

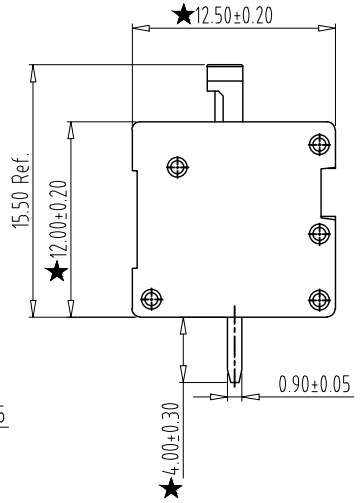

ITEM	NAME OF PART	NO. OF PART	Q"TY	MATERIAL	NOTE
5	PIN	XX	P	COPPER ALLOY	Tin Plated
4	SHRAPNEL	XX	P	Stainless steel	/
3	BUTTON	XX	P	PA66 UL94V-0	SEE NOTE
2	COVER	XX	1	PA66 UL94V-0	SEE NOTE
1	HOUSING	XX	P	PA66 UL94V-0	SEE NOTE

DWG.	LZW	DATE	23.10.21	SIZE	A4	UNITS	mm	SHEET/OF 1 / 1
CHK.		DATE		SCALE	1:1		
APP.		DATE		NAME	GT211V-5.0-XXP-XX-00		
Golten 宁波冠泰电子有限公司 NINGBO GOLTEN ELECTRONICS CO., LTD.				DWGNO.	XXXX		

Total Pitch Tolerances in mm									Nominal dimension range in mm									⊥		≒	—		//
over 0 to 30	over 30 to 53	over 53 to 70	over 70 to 90	over 90 to 115	over 115 to 150	over 150 to 250	over 250 to 350	over 350 to 500	over 0 to 30	over 30 to 53	over 53 to 70	over 70 to 90	over 90 to 115	over 115 to 150	over 150 to 200	over 200 to 250	over 250 to 320	over 0 to 10	over 10	all	over 0 to 100	over 100 to 150	over 150
±0.18	±0.20	±0.25	±0.3	±0.35	±0.44	±0.60	±0.70	±0.85	±0.20	±0.25	±0.30	±0.35	±0.44	±0.55	±0.70	±0.80	±0.90	0.2	0.3	0.3	0.2	0.3	0.5