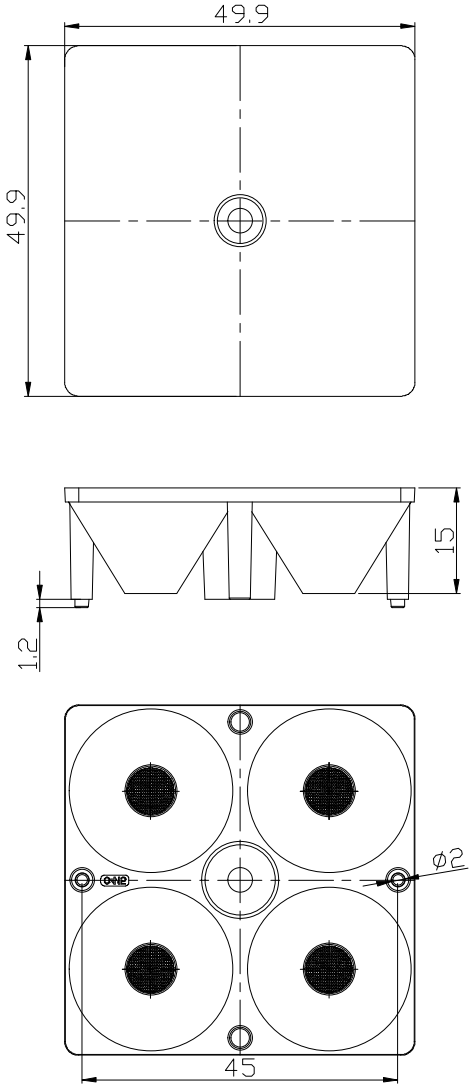

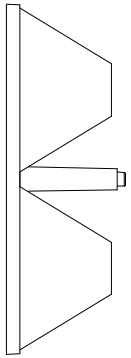

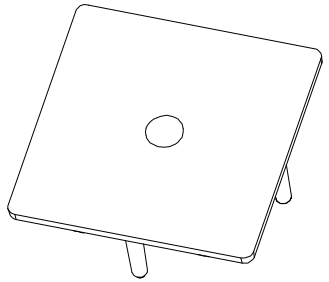

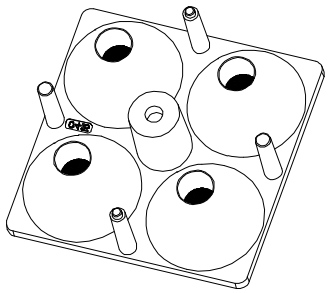

NOTE:

1. ALL SURFACES NO SHRINKAGE,BURRS,JUNCTION LINES ALLOWED
2. CRITICAL DIMENSIONS ARE INDICATED ON THE DRAWING
3. ALL INDICATED SURFACES ARE POLISHED, THE OPTICAL SURFACE POLISHING MUST BE SPI-A1 STANDARD
4. THE PARTS IS COMPLIANT TO ROHS AND REACH STANDARD

CHANGE													
						PART		颜色 COLOR	Transparency		SCALE	1:1	ASAHI OPTICS LIMITED
						0 ~ 10	±0.05						
						10 ~ 20	±0.10	材质 MATERIAL	PMMA		UNIT	mm	
						20 ~ 30	±0.15						
	A/0	2022-05-08	NEW	——	——	30 ~	±0.20	设计 DESIGN	C.Y.CAI	2022-05-08	SIZE	A4	料号 PART NO. ALHB50D4LED3535T7
						Angle	± 1°						
	版次 REV	日期 DATE	变更说明 MODIFICATION DESCRIPTION	变更 CHANGE	核准 APPROVE	DIM	TOL	核准 APPROVE			SHEET		品名 Product Stadium light