Transmittal, reproduction, dissemination and/or editing of this document as well as utilization of its contents and communication thereof to others without express authorization are prohibited.
未经允许禁止传输、复制、编辑该文档，以及利用其内容进行交流

REVISION RECORD				
REV	ECN	DESCRIPTION	DRFT	DATE
A	D0R0008381	Delete current value	Nick Lu	2023/07/06

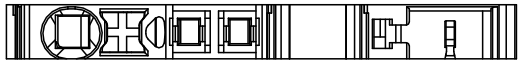

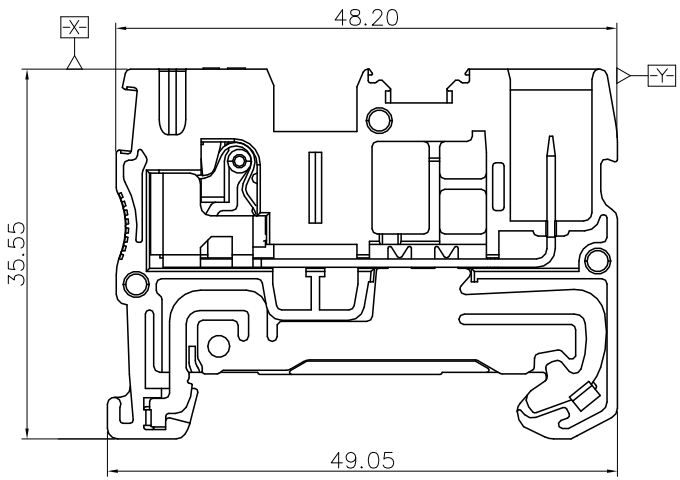

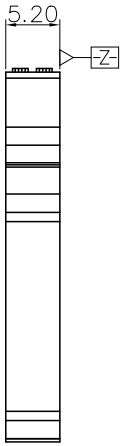

Connection method:
1. For Solid wire, peeling wire in right length, push down the wire.
2. For stranded wire, peeling wire in right length, push down the key & fix the wire, or wire furruled and fix then.

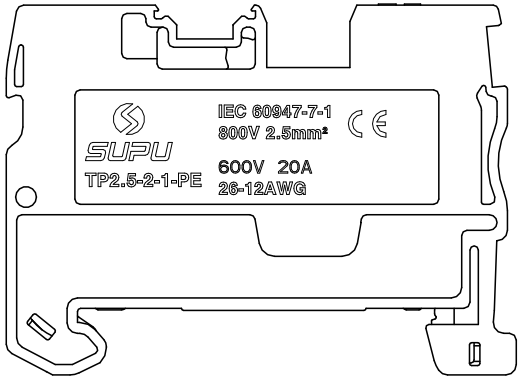

NOTES:
UL/CUL Standard
1.Conductor cross section : 26~12AWG
2.Rated Voltage/Current :

Use group	B	C	D
Rated voltage(V)	600	600	–

IEC Standard
1.Conductor cross section : 0.2~2.5mm²

Wire range(Solid/Stranded)	0.2–2.5mm²
Solid	0.2–4mm²
Stranded	0.2–4mm²
Stranded with ferrules without plastic sleeve	0.2–2.5mm²
Stranded with ferrules with plastic sleeve	0.2–2.5mm²

2.Rated Voltage/Current :

Surge voltage category	III
Pollution degree	3
Rated surge voltage(KV)	8.0
Rated voltage(V)	800

Material:

Insulator	PA66	UL94 V–0
Conductor	Copper alloy	Sn plated
Spring	Stainless steel	
Ground Pin	Copper alloy	Sn plated

General information:
1.Dimension shall be interpreted per ASME Y14.5–2009
2.Stripping length : 8~10mm
3.Operating temperature: –40°C~+105°C
4.RoHS Compliance
5.Undimensioned Tolerances:

Pitch Range In mm			Nominal Dimension Range In mm					– ⌒ ⌭
TO 6	Over 6 TO 10	Over 10 TO 24	TO 30	Over 30 TO 60	Over 60 TO 100	Over 100 TO 150	Over 150	0.1/10 ∠
±0.15	±0.20	±0.30	±0.30	±0.50	±0.70	±1.00	±1.30	±2°

HOW TO ORDER:
TP2.5–2–1–PE
Sereies No.
Color: PE: Yellow and Green

订货号 Order No.	TP2.5-2-1-PE		名称 Name	TP系列-插拔式正面接线-2.5mm²一针一线接地端子	未注公差 Tolerance	表面 Surface	
项目 Item	签字 Signature	日期 Date			Tolerances Table	VDI21	
设计 Design	Nick	05/08/21″	图号 Drawing No.	PRM002621	版本号 Revision Number	重量 Weight	比例 Scale
审核 Check	DF	05/08/21″	材料 Material	Notes	M1	/	1:1
工艺 Process	–	–	物料号 Item No.		第1页/共1页 1 of 1	mm	
标准化 Unify	–	–		411524005	SUPU 宁波速普电子有限公司 NINGBO SUPU ELECTRONICS CO.,LTD.		
批准 Approve	DAVID	05/08/21″					

借通用件登记 Common Part
原图号 Old Draw. No.
底图总号 Assembly No.