Raw Material	PA66、SILICONE、COPPER ALLOY
Certification	RoHS/CE
Flame-resistant rating	UL94 V-0
Level of protection	Ip67
Voltage rating/Current rating	1.5A, 220V
Withstanding voltage	3700V
Cable gague	4.5-6.5mm
Operating temperature	-40～105 ℃

REV	DESCRIPTION	DESIGN	DATE
A0	NEW DRAWING	EDDIE	2022/4/25

Classification 0-4

Max Current 600MA

PSE out Voltage 50-57V

PSE output power ÿ30W

PD Input Voltage 25.5W

PD Max power 25.5W

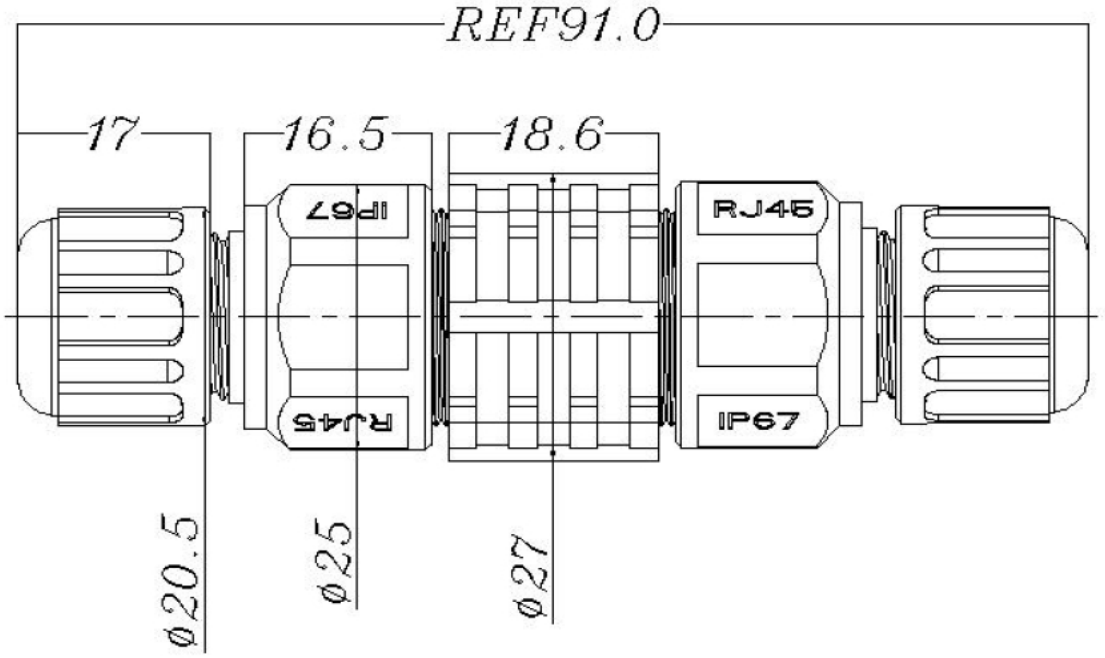

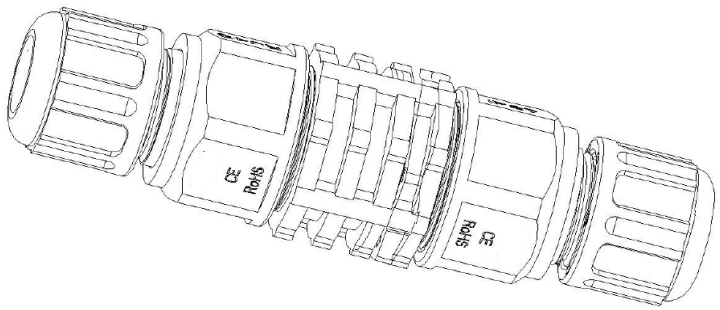

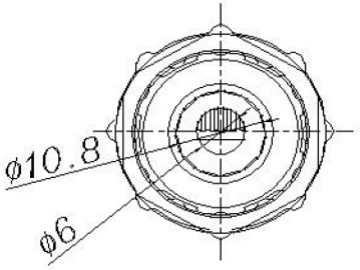

85 g	42x30x34 cm	200 PCS	17 Kg
Weight	MEAS	Each carton number	G.W.

TOLERANCE UNSPECIFIED			UNIT	mm	DRAW		P/N	RJ45
X. ±0.35	X.XX ±0.10	X.° ±3°	SCALE	1:1	CHKD		D/N	
X.X ±0.20	X.XXX ±0.05	X.X° ±2° X.XX° ±1°	SHEET	1/1	APPD		TITLE	WATERPROOF CONNECTOR

FUCON®