Transmittal, reproduction, dissemination and/or editing of this document as well as utilization of its contents and communication thereof to others without express authorization are prohibited.
??????????????????????????????

REVISION RECORD				
REV	ECN	DESCRIPTION	DRFT	DATE
A	DCN0006226	Updated drawings	dfz	2020/1/07
A		Updated drawings	ding	2022.07.30

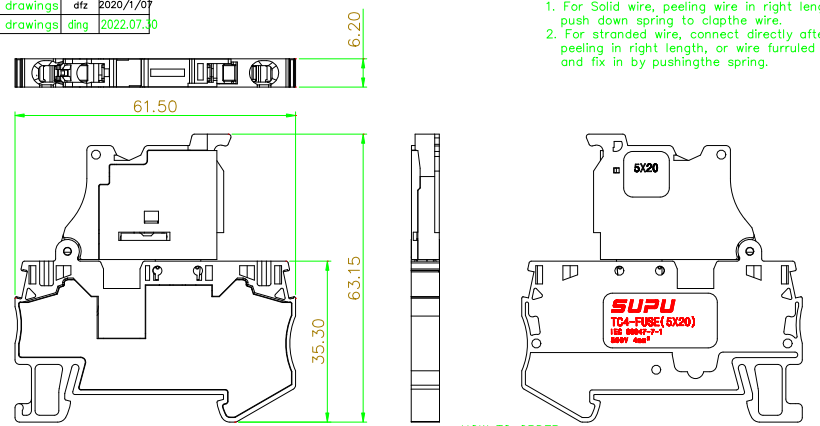

Connection method:
1. For Solid wire, peeling wire in right length, push down spring to clapthe wire.
2. For stranded wire, connect directly after peeling in right length, or wire furruled and fix in by pushingthe spring.

NOTES:
UL/CUL Standard
1.Conductor cross section : 28~10AWG
2.Rated Voltage/Current :

Use group	B	C	D
Rated voltage(V)	300	300	
Rated current(A)	10	10	

IEC Standard
1.Conductor cross section :

Wire range(Solid/Stranded)	0.2–4mm²
Solid	0.2–6mm²
Stranded	0.2–4mm²
Stranded with ferrules without plastic sleeve	0.2–4mm²
Stranded with ferrules with plastic sleeve	0.2–4mm²

2.Rated Voltage/Current :

Surge voltage category	?
Pollution degree	3
Rated surge voltage(KV)	6
Rated voltage(V)	500
Rated current(A)	6.3

Material:

Insulator	PA66	UL94 V-0
Conductor	Copper alloy	Sn plated
Spring	Stainless steel	

General information:
1.Dimension shall be interpreted per ASME Y14.5–2009
2.Stripping length : 10mm
3.Operating temperature: –40°C~+105°C
4.RoHS Compliance
5.The current and voltage parameterss are deter mined by the fuse
6.Undimensioned Tolerances:

Pitch Range In mm				Nominal Dimension Range In mm						
	Over 6 TO 10	Over 10 TO 24		Over 30 TO 60	Over 60 TO 100	Over 100 TO 150	Over 150	–	⌒	⊿
TO 6			TO 30					0.1/10		
								∠		
±0.15	±0.20	±0.30	±0.30	±0.50	±0.70	±1.00	±1.30	±2°		

HOW TO ORDER:
TC4–XX–XX

Sereies No.

Color:
BK: Black
GY: Grey
OG: Orange

Type:
FUSELED250: Diode Voltage: 250V
FUSELED220: Diode Voltage: 220V
FUSELED36: Diode Voltage: 36V
FUSELED24: Diode Voltage: 24V

??? Order No.	TC4–XX–XX		? ? Name	TC?????? 4mm² ?????? ???????	???? Tolerance	?? Surfaace	
? ? Item	? ? Signature	? ? Date			Tolerances Table	VDI21	
? ? Design	dfz	01/06/20	? ? Drawing No.	PRM001128	??? Revision Number	?? Weight	?? Scale
? ? Check	cw	01/06/20	? ? Material	Notes	M2	/	1:1
? ? Process	–	–	??? Item No.		?1?/?1? 1 of 1		mm
??? Unify	–	–					
? ? Approve	lwl	01/06/20					

SUPU 宁波顺普电子有限公司 NINGBO SUPU ELECTRONICS CO.,LTD.

??????
Common Part

???
Old Draw. No.

????
Assembly No.