| REV | CONTENT | CHK | DATE |
|---|---|---|---|
| V0.0 | CONTENT | MYZ | 21.07.03 |

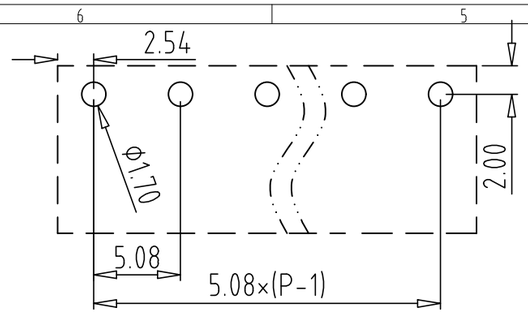


PCB LAYOUT

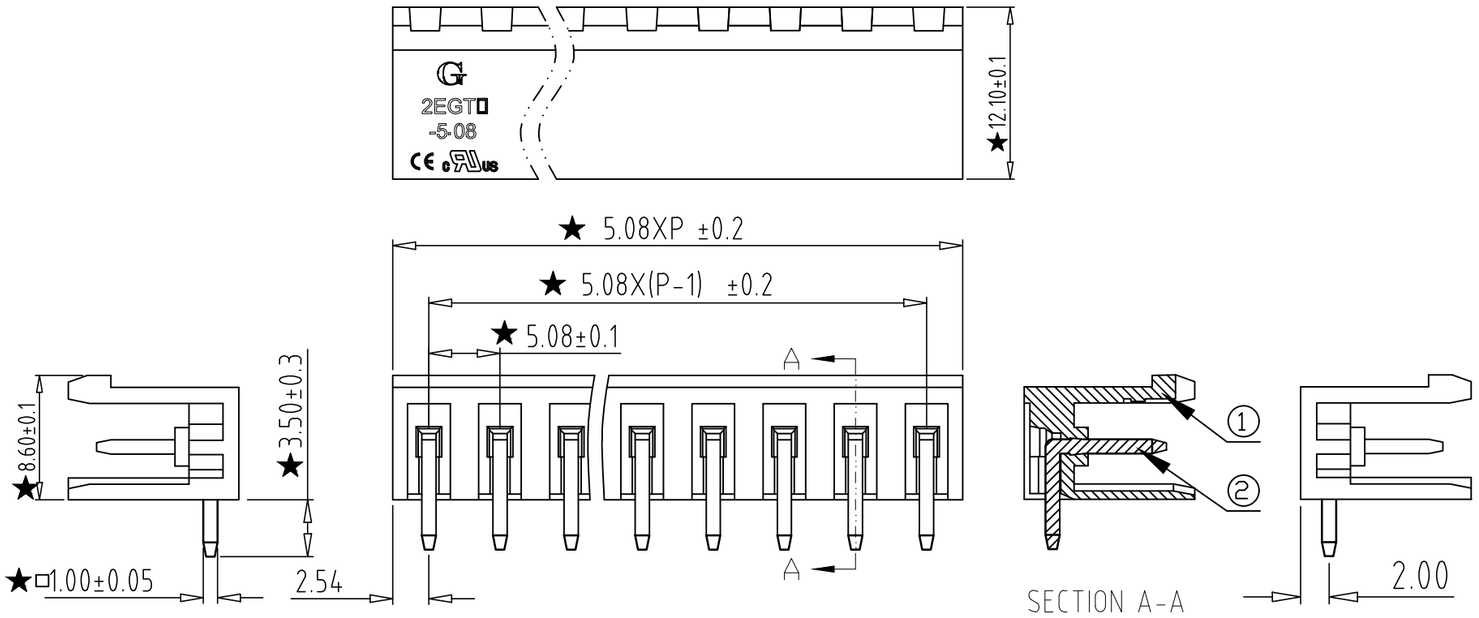


## Electrical :

| | UL | IEC |
|---|---|---|
| 1.Rated Voltage : | 300V | 320V |
| 2.Rated Current : | 15A | 20A |

3.Withstanding Voltage : AC1600V/1Min.
4.Operating Temperature : -40°C~+105°C
5. RoHS Compliance
6.Safty Approval : cULus CE
7."★" is the key quality control point

2EGTR - 5.08 - XXP - X X - 100
① ② ③ ④ ⑤ ⑥

① Sereies NO.

② Pitch

③ Poles
02 02Contacts
03 03Contacts
...
24 24Contacts

④ 1 Single Pitch
2 Double Pitch

⑤ Color: 1 Grey
2 Blue
3 Black
4 Green
5 Orange
6 Red
7 Transparent
8 Yellow
9 White

⑥ Customer Request: 100--Standard

| Total Pitch Tolerances in mm | | | | | | | | | Nominal dimension range in mm | | | | | | | | | ⊥ | | ⌭ | — | | // |
|---|---|---|---|---|---|---|---|---|---|---|---|---|---|---|---|---|---|---|---|---|---|---|---|
| over 0 to 30 | over 30 to 53 | over 53 to 70 | over 70 to 90 | over 90 to 115 | over 115 to 150 | over 150 to 250 | over 250 to 350 | over 350 to 500 | over 0 to 30 | over 30 to 53 | over 53 to 70 | over 70 to 90 | over 90 to 115 | over 115 to 150 | over 150 to 200 | over 200 to 250 | over 250 to 320 | over 0 to 10 | over 10 | all | over 0 to 100 | over 100 to 150 | over 150 |
| ±0.18 | ±0.20 | ±0.25 | ±0.3 | ±0.35 | ±0.44 | ±0.60 | ±0.70 | ±0.85 | ±0.20 | ±0.25 | ±0.30 | ±0.35 | ±0.44 | ±0.55 | ±0.70 | ±0.80 | ±0.90 | 0.2 | 0.3 | 0.3 | 0.2 | 0.3 | 0.5 |

| | | | | | | | | | |
|---|---|---|---|---|---|---|---|---|---|
| 2 | PIN | | XX | | P | Brass | | Tin Plated | |
| 1 | HOUSING | | XX | | 1 | PA66(UL94V-0) | | SEE NOTE | |
| ITEM | NAME OF PART | | NO. OF PART | | Q"TY | MATERIAL | | NOTE | |
| DWG. | MYZ | DATE | 21.07.03 | | SIZE | A4 | UNITS mm | SHEET/OF | 1 / 1 |
| CHK. | | DATE | | | SCALE | 1:1 | | | |
| APP. | | DATE | | | NAME | 2EGTR-5.08-XXP-XX-100 | | | |
| Golten 宁波冠泰电子有限公司 NINGBO GOLTEN ELECTRONICS CO., LTD. | | | | | DWGNO. | XXXX | | | |