Data Sheet

Customer:

Product: Aluminum Electrolytic Capacitors – EHL Series

Size : 22x25mm ~ 35x60mm

Issued Date: 21-Oct.-2021

Edition: Ver. 2

Record of change

Date	Ver.	Description	Page
30-May-2016	1		
21-Oct-2021	2	EHL102M2DBA 尺寸變更為 25X60	5

HITANO ENTERPRISE CORP.

7F-7, No. 3, Wu Chuan 1st Road, New Taipei Industrial Park,
New Taipei City, TAIWAN, R.O.C.
Tel: +886 2 2299 1331 (Rep.)
Fax: +886 2 2298 2466, 2298 2969

Prepared by	Checked by	Approved by	Accepted by (customer)
30-May-2016	30-May-2016	30-May-2016	
Andy Hsu	***Hwa Wu***	***Hwa Wu***	

HITANO ENTERPRISE CORP. ®

EHL SERIES

- 105℃ 5000 hours assured life.
- Directly mountable on printed circuit board without holders.
- Low ESR and long life.
- Terminal spacing fixed at 10mm for PC board plug in.
- Aluminum case designed explosion-proof vent.

Characteristics

Voltage Range	10 ~ 100V				160 ~ 500V				
Capacitance Range	560 ~ 47000uF				47 ~ 1500uF				
Temperature Range	-40 ~ +105℃				-25 ~ +105℃				
Capacitance Tolerance	±20% at 120Hz , 20℃(10% Tol. is available upon request)								
Leakage Current	$I = 3\sqrt{CV}$ (uA) max C: Capacitance, V:W.V. (After 5 minutes)								
Dissipation Factor (tanδ)	Rated voltage	10	16	25	35	50	63 ~ 400	450	500
	tanδ	0.55	0.40	0.30	0.25	0.20	0.15	0.20	0.25
	at 20℃, 120Hz								
Stability at Low Temperature	Impedance ration at 120Hz between the -25℃ or -40℃ value and 20℃ value shall not exceed the values given below.								
	Rated Voltage (V)	10, 16	25	35	50, 63	80, 100	160~400	450~500	
	Z-25℃/Z 20℃	4	3	3	2	2	4	6	
	Z-40℃/Z 20℃	15	10	8	6	5	-	-	
Load Life	The following specifications shall be satisfied when the capacitors are restored to 20℃ after rated working voltage applied for 5,000 hours at max. Operating temperature.								
	Capacitance change ≦±25% of the initial value. Dissipation factor ≦±250% of the initial specified value Leakage current ≦The initial specified value.								
Shelf Life	After storage for 1000 hours at 105℃ with no voltage applied, the capacitor shall meet the specified limit in load life.								

Diagram of dimensions

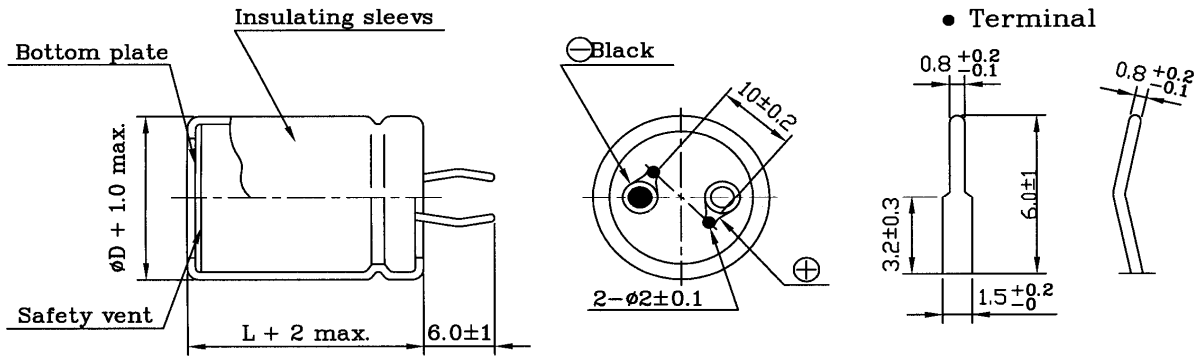

Multiplier for Ripple Current VS Frequency

W.V.(Vdc)\\ (Hz)	50/60	120	300	1K	10K	50K
10 ~ 50	0.95	1	1.03	1.05	1.08	1.08
63 ~ 100	0.93	1	1.07	1.13	1.19	1.20
160 ~ 250	0.81	1	1.17	1.32	1.45	1.50
350 ~ 500	0.71	1	1.16	1.30	1.41	1.43

(mm)

Dia	22	25	30	35
α	2	2	3	3

HITANO ENTERPRISE CORP. ®

EHL SERIES

Case size & Maximum Ripple Current (A rms 105℃ 120Hz) & ESR. (Ω 20℃ 120Hz)

ϕ DxL (mm)

WV / ϕ D / Cap	10											
	A			B			C			D		
uF	Size	RC	ESR	Size	RC	ESR	Size	RC	ESR	Size	RC	ESR
6800	22x25	1.30	0.107									
8200	22x25	1.56	0.089									
10000	22x30	1.60	0.073	25x25	1.60	0.073						
12000	22x35	1.80	0.061	25x30	1.80	0.061	30x25	1.80	0.061			
15000	22x35	2.10	0.049	25x30	2.10	0.049	30x25	1.80	0.049			
18000	22x35	2.20	0.041	25x30	2.20	0.041						
22000	22x40	2.75	0.033	25x35	2.75	0.033	30x30	2.75	0.033	35x25	2.75	0.033
27000	25x50	3.05	0.027	25x50	3.05	0.027	30x40	3.05	0.027	35x30	3.05	0.027
33000	25x50	3.40	0.022	30x40	3.40	0.022	35x35	3.40	0.022			
39000	30x50	3.60	0.019	35x40	3.60	0.019						
47000	30x50	4.60	0.016	35x50	4.60	0.016						

WV / ϕ D / Cap	16											
	A			B			C			D		
uF	Size	RC	ESR	Size	RC	ESR	Size	RC	ESR	Size	RC	ESR
5600	22x25	1.40	0.095									
6800	22x30	1.60	0.078	25x25	1.60	0.078						
8200	22x35	1.80	0.065	25x30	1.80	0.065						
10000	22x40	2.10	0.053	25x30	2.10	0.053	30x25	2.10	0.053			
12000	22x40	2.40	0.044	25x35	2.40	0.044	30x25	2.40	0.044			
15000	22x50	2.70	0.035	25x40	2.70	0.035	30x30	2.70	0.035			
18000	25x50	3.05	0.029	30x35	3.05	0.029	35x30	3.05	0.029			
22000	25x50	3.40	0.024	30x40	3.40	0.024	35x45	3.40	0.024			
27000	30x50	4.02	0.020	35x40	4.02	0.020						
33000	30x50	4.32	0.016	35x40	4.32	0.016						
39000	35x50	4.95	0.014	35x50	4.95	0.014						

WV / ϕ D / Cap	25											
	A			B			C			D		
uF	Size	RC	ESR	Size	RC	ESR	Size	RC	ESR	Size	RC	ESR
4700	22x30	1.50	0.085	25x25	1.50	0.085						
5600	22x35	1.60	0.071	25x25	1.60	0.071						
6800	22x40	1.87	0.059	25x30	1.87	0.059	30x25	1.87	0.059			
8200	22x45	2.20	0.049	25x35	2.20	0.049	30x30	2.20	0.049	35x25	2.20	0.049
10000	22x50	2.35	0.040	25x40	2.35	0.040	30x35	2.35	0.040	35x30	2.35	0.040
12000	25x50	2.70	0.033	25x50	2.70	0.033	30x35	2.70	0.033	35x30	2.70	0.033
15000	30x40	3.15	0.027	35x35	3.15	0.027						
18000	30x50	3.60	0.022	35x40	3.60	0.022						
22000	35x45	3.90	0.018									
27000	35x50	4.60	0.015									

HITANO ENTERPRISE CORP. ®

EHL SERIES

Case size & Maximum Ripple Current (A rms 105°C 120Hz) & ESR. (Ω 20°C 120Hz)

ϕ DxL (mm)

WV / ϕD / Cap	35											
	A			B			C			D		
uF	Size	RC	ESR	Size	RC	ESR	Size	RC	ESR	Size	RC	ESR
2200	22x25	1.10	0.151									
2700	22x25	1.29	0.123									
3300	22x30	1.40	0.100	25x25	1.40	0.100						
3900	22x35	1.55	0.085	25x30	1.55	0.085						
4700	22x40	1.75	0.071	25x30	1.75	0.071	30x25	1.75	0.071			
5600	22x45	1.95	0.059	25x35	1.95	0.059	30x30	1.95	0.059	35x25	1.95	0.059
6800	22x50	2.20	0.049	25x40	2.20	0.049	30x35	2.20	0.049	35x30	2.20	0.049
8200	25x50	2.50	0.040	30x35	2.50	0.040	35x30	2.50	0.040			
10000	30x40	2.80	0.033	35x35	2.80	0.033						
12000	30x50	3.30	0.028	35x40	3.30	0.028						
15000	35x50	4.25	0.022									

WV / ϕD / Cap	50											
	A			B			C			D		
uF	Size	RC	ESR	Size	RC	ESR	Size	RC	ESR	Size	RC	ESR
1500	22x25	1.00	0.177									
1800	22x30	1.10	0.147	25x25	1.10	0.147						
2200	22x35	1.30	0.121	25x25	1.30	0.121						
2700	22x40	1.45	0.098	25x30	1.45	0.098	30x25	1.45	0.098			
3300	22x40	1.70	0.080	25x35	1.70	0.080	30x30	1.70	0.080			
3900	22x50	1.90	0.068	25x40	1.90	0.068	30x35	1.90	0.068			
4700	25x40	2.10	0.056	30x35	2.10	0.056	35x30	2.10	0.056			
5600	25x50	2.36	0.047	30x40	2.36	0.047	35x35	2.36	0.047			
6800	30x50	2.70	0.039	35x40	2.70	0.039						
8200	30x50	3.16	0.032	35x40	3.16	0.032						
10000	35x50	3.50	0.027									

WV / ϕD / Cap	63											
	A			B			C			D		
uF	Size	RC	ESR	Size	RC	ESR	Size	RC	ESR	Size	RC	ESR
1000	22x25	1.00	0.199									
1200	22x25	1.15	0.166									
1500	22x35	1.30	0.133	25x30	1.30	0.133						
1800	22x40	1.45	0.111	25x30	1.45	0.111	30x25	1.45	0.111			
2200	22x45	1.65	0.090	25x35	1.65	0.090	30x30	1.65	0.090	35x25	1.65	0.090
2700	22x50	1.90	0.074	25x40	1.90	0.074	30x35	1.90	0.074	35x30	1.90	0.074
3300	25x50	2.15	0.060	30x35	2.15	0.060	35x30	2.15	0.060			
3900	30x40	2.40	0.051	35x35	2.40	0.051						
4700	30x50	2.70	0.042	35x40	2.70	0.042						
5600	30x50	3.10	0.036	35x40	3.10	0.036						
6800	35x50	3.50	0.029									

HITANO ENTERPRISE CORP. ®

EHL SERIES

Case size & Maximum Ripple Current (A rms 105℃ 120Hz) & ESR. (Ω 20℃ 120Hz)

ϕ DxL (mm)

WV / ϕ D / Cap	80											
	A			B			C			D		
uF	Size	RC	ESR	Size	RC	ESR	Size	RC	ESR	Size	RC	ESR
680	22x25	0.95	0.293									
820	22x30	1.00	0.243									
1000	22x35	1.20	0.199	25x25	1.20	0.199						
1200	22x40	1.40	0.166	25x30	1.40	0.166						
1500	22x45	1.60	0.133	25x35	1.60	0.133	30x25	1.60	0.133			
1800	22x50	1.80	0.111	25x40	1.80	0.111	30x30	1.80	0.111	35x25	1.80	0.111
2200	25x50	2.05	0.090	30x35	2.05	0.090	35x30	2.05	0.090			
2700	30x40	2.35	0.074	35x35	2.35	0.074						
3300	30x50	2.70	0.060	35x40	2.70	0.060						
3900	35x45	2.80	0.051									
4700	35x50	3.40	0.042									

WV / ϕ D / Cap	100											
	A			B			C			D		
uF	Size	RC	ESR	Size	RC	ESR	Size	RC	ESR	Size	RC	ESR
560	22x30	0.95	0.355	25x25	0.95	0.355						
680	22x35	1.10	0.293	25x30	1.10	0.293						
820	22x40	1.40	0.243	25x30	1.40	0.243	30x25	1.40	0.243			
1000	22x45	1.40	0.199	25x35	1.40	0.199	30x30	1.40	0.199	35x25	1.40	0.199
1200	22x50	1.60	0.166	25x40	1.60	0.166	30x35	1.60	0.166	35x30	1.60	0.166
1500	25x50	1.85	0.133	30x40	1.85	0.133	35x30	1.85	0.133			
1800	30x45	2.05	0.111	30x45	2.05	0.111	35x35	2.05	0.111			
2200	30x50	2.40	0.090	35x40	2.40	0.090						
2700	35x50	2.80	0.074									

WV / ϕ D / Cap	160											
	A			B			C			D		
uF	Size	RC	ESR	Size	RC	ESR	Size	RC	ESR	Size	RC	ESR
270	22x30	0.60	0.737									
330	22x35	0.80	0.603	25x25	0.80	0.603						
390	22x35	0.85	0.510	25x30	0.85	0.510						
470	22x45	1.10	0.423	25x35	1.10	0.423	30x30	1.10	0.423			
560	22x45	1.16	0.355	25x35	1.16	0.355	30x30	1.16	0.355			
680	22x50	1.30	0.293	25x45	1.30	0.293	30x35	1.30	0.293			
820	25x45	1.43	0.243	30x40	1.43	0.243	35x30	1.43	0.243			
1000	30x45	1.69	0.199	35x35	1.69	0.199						
1200	35x45	1.95	0.166									
1500	35x50	2.40	0.133									

HITANO ENTERPRISE CORP. ®

EHL SERIES

Case size & Maximum Ripple Current (A rms 105℃ 120Hz) & ESR. (Ω 20℃ 120Hz)

ϕ DxL (mm)

WV / ϕ D / Cap	200											
	A			B			C			D		
uF	Size	RC	ESR	Size	RC	ESR	Size	RC	ESR	Size	RC	ESR
180	22x25	0.57	1.105									
220	22x30	0.65	0.904									
270	22x35	0.78	0.737	25x25	0.78	0.737						
330	22x40	0.90	0.603	25x30	0.90	0.603						
390	22x40	0.98	0.510	25x35	0.98	0.510	30x25	0.98	0.510			
470	22x40	1.15	0.423	25x35	1.15	0.423	30x25	1.15	0.423			
560	22x45	1.30	0.355	25x35	1.30	0.355	30x25	1.30	0.355			
680	22x50	1.45	0.293	25x40	1.45	0.293	30x30	1.45	0.293	35x25	1.45	0.293
820	25x45	1.60	0.243	30x35	1.60	0.243	35x35	1.77	0.243			
1000	25x60	1.90	0.199	30x45	1.90	0.199	35x35	1.90	0.199			
1200	30x50	2.10	0.166	35x40	2.10	0.166						
1500	35x50	2.37	0.133									

WV / ϕ D / Cap	250											
	A			B			C			D		
uF	Size	RC	ESR	Size	RC	ESR	Size	RC	ESR	Size	RC	ESR
150	22x25	0.52	1.326									
180	22x30	0.64	1.105	25x25	0.64	1.105						
220	22x35	0.75	0.904	25x30	0.75	0.904						
270	22x40	0.85	0.737	25x30	0.85	0.737	30x25	0.85	0.737			
330	22x45	1.00	0.603	25x35	1.00	0.603	30x30	1.00	0.603	35x25	1.00	0.603
390	22x50	1.10	0.510	25x40	1.10	0.510	30x35	1.10	0.510			
470	25x50	1.20	0.423	30x35	1.20	0.423	35x30	1.20	0.423			
560	30x40	1.35	0.355	35x35	1.35	0.355						
680	30x50	1.55	0.293	35x40	1.55	0.293						
820	30x55	1.70	0.243									
1000	35x50	2.00	0.199									

WV / ϕ D / Cap	350											
	A			B			C			D		
uF	Size	RC	ESR	Size	RC	ESR	Size	RC	ESR	Size	RC	ESR
68	22x25	0.34	2.926									
82	22x30	0.40	2.426									
100	22x35	0.50	1.989	25x25	0.50	1.989						
120	22x40	0.56	1.658	25x30	0.56	1.658	30x25	0.56	1.658			
150	22x45	0.63	1.326	25x35	0.63	1.326	30x30	0.63	1.326			
180	22x50	0.70	1.105	25x40	0.70	1.105	30x30	0.70	1.105			
220	25x50	0.82	0.904	30x35	0.82	0.904	35x30	0.82	0.904			
270	30x40	0.90	0.737	35x35	0.90	0.737						
330	30x50	1.10	0.603	35x40	1.10	0.603						
390	35x45	1.20	0.510									
470	35x50	1.30	0.423									

HITANO ENTERPRISE CORP. ®

EHL SERIES

Case size & Maximum Ripple Current (A rms 105℃ 120Hz) & ESR. (Ω 20℃ 120Hz)

ϕ DxL (mm)

WV / ϕ D / Cap	400											
	A			B			C			D		
uF	Size	RC	ESR	Size	RC	ESR	Size	RC	ESR	Size	RC	ESR
47	22x25	0.30	4.233									
56	22x25	0.32	3.553									
68	22x30	0.40	2.926	25x25	0.40	2.926						
82	22x35	0.45	2.426	25x30	0.45	2.426						
100	22x40	0.50	1.989	25x30	0.50	1.989	30x25	0.50	1.989			
120	22x40	0.55	1.658	25x35	0.55	1.658	30x30	0.55	1.658			
150	22x50	0.65	1.326	25x40	0.65	1.326	30x35	0.65	1.326			
180	25x45	0.75	1.105	30x35	0.75	1.105	35x30	0.75	1.105			
220	25x50	0.85	0.904	30x40	0.85	0.904	35x35	0.85	0.904			
270	30x50	1.05	0.737	35x40	1.05	0.737						
330	35x45	1.10	0.603									
390	35x50	1.20	0.510									
470	35x50	1.42	0.423									

WV / ϕ D / Cap	450											
	A			B			C			D		
uF	Size	RC	ESR	Size	RC	ESR	Size	RC	ESR	Size	RC	ESR
47	22x25	0.35	5.644									
56	22x30	0.41	4.737	25x25	0.41	4.737						
68	22x30	0.54	3.901	25x25	0.54	3.901						
82	22x35	0.62	3.235	25x30	0.62	3.235	30x25	0.62	3.235			
100	22x40	0.70	2.653	25x35	0.70	2.653	30x30	0.70	2.653			
120	22x45	0.84	2.210	25x40	0.84	2.210	30x35	0.84	2.210			
150	22x50	0.95	1.768	25x40	0.95	1.768	30x35	0.95	1.768	35x30	0.95	1.768
180	25x45	1.00	1.474	30x40	1.00	1.474	35x30	1.10	1.474			
220	25x50	1.15	1.206	30x45	1.15	1.206	35x35	1.15	1.206			
270	30x50	1.32	0.982	35x40	1.32	0.982						
330	35x45	1.50	0.804									
390	35x50	1.78	0.680									
470	35x55	2.03	0.564									

WV / ϕ D / Cap	500											
	A			B			C			D		
uF	Size	RC	ESR	Size	RC	ESR	Size	RC	ESR	Size	RC	ESR
47	22x30	0.35	7.055									
56	22x35	0.41	5.921	25x30	0.41	5.921						
68	22x35	0.54	4.876	25x30	0.54	4.876						
82	22x40	0.62	4.044	25x35	0.62	4.044	30x30	0.62	4.044			
100	22x45	0.70	3.316	25x40	0.70	3.316	30x35	0.70	3.316			
120	22x50	0.84	2.763	25x40	0.84	2.763	30x35	0.84	2.763	35x30	0.84	2.763
150	25x45	0.95	2.210	30x40	0.95	2.210	35x30	0.95	2.210			
180	25x50	1.00	1.842	30x40	1.00	1.842	35x35	1.10	1.842			
220	30x45	1.15	1.507	35x40	1.17	1.507						
270	30x50	1.32	1.228	35x45	1.32	1.228						
330	35x50	1.50	1.005									
390	35x55	1.78	0.850									
470	35x60	2.12	0.705									

Part Numbering Designation

EHL	**101**	**M**	**2G**	**B**	**A**
SERIES	CAPACITANCE	TOL.	W.V.	PACKAGE	SIZE
	IN 3DIGITS	M= ± 20%	16= 16V	B= Bulk	A= A Size
	101= 100uF	K= ± 10%	25= 25V		B= B Size
	102= 1000uF		35= 35V		C= C Size
	103= 10,000uF		50= 50V		D=D Size
			63= 63V		
			80= 80V		
			2A= 100V		
			2C= 160V		
			2D= 200V		
			2E= 250V		
			2V= 350V		
			2G= 400V		
			2W= 450V		
			2H= 500V		