Transmittal, reproduction, dissemination and/or editing of this document as well as utilization of its contents and communication thereof to others without express authorization are prohibited.
未经允许禁止传输、复制、编辑该文档，以及利用其内容进行交流

REVISION RECORD

| REV | ECN | DESCRIPTION | DRFT | DATE |
|---|---|---|---|---|
| 1 | DCN0006226 | 图纸更新 | 董方正 | 2020/1/07 |

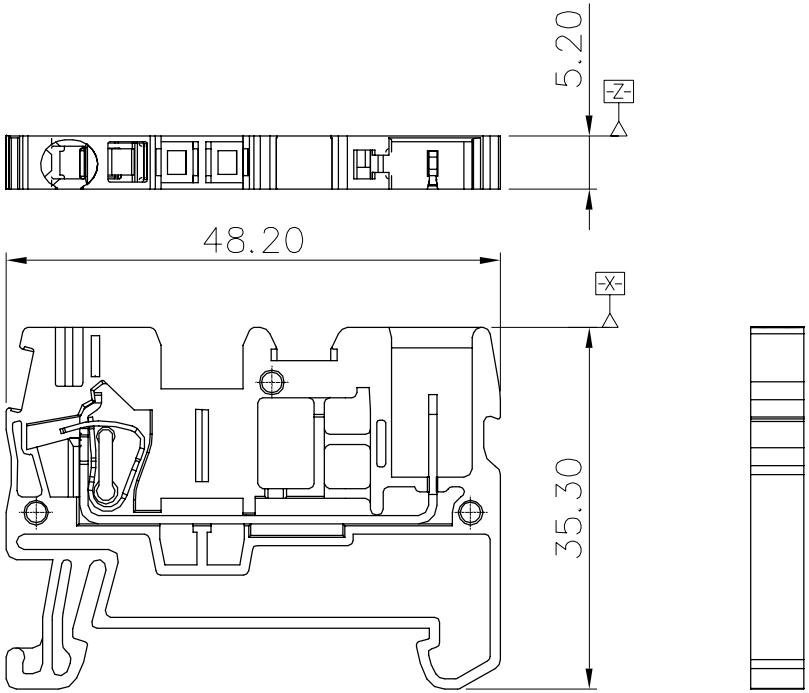


Connection method:
1. For Solid wire, peeling wire in right length, push down spring to clapthe wire.
2. For stranded wire, connect directly after peeling in right length, or wire furruled and fix in by pushingthe spring.

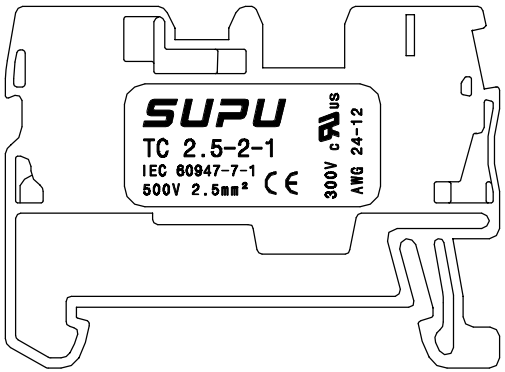


NOTES:

UL/CUL Standard

1.Conductor cross section : 24~12AWG

2.Rated Voltage/Current :

| Use group | B | C | D |
|---|---|---|---|
| Rated voltage(V) | 300 | 300 | |
| Rated current(A) | 20 | 20 | |

IEC Standard

1.Conductor cross section :

| | |
|---|---|
| Wire range(Solid/Stranded) | 0.2-2.5mm² |
| Solid | 0.2-4mm² |
| Stranded | 0.2-2.5mm² |
| Stranded with ferrules without plastic sleeve | 0.2-2.5mm² |
| Stranded with ferrules with plastic sleeve | 0.2-2.5mm² |

2.Rated Voltage/Current :

| | |
|---|---|
| Surge voltage category | Ⅲ |
| Pollution degree | 3 |
| Rated surge voltage(KV) | 6 |
| Rated voltage(V) | 500 |
| Rated current(A) | 24 |

Material:

| | | |
|---|---|---|
| Insulator | PA66 | UL94 V-0 |
| Conductor | Copper alloy | Sn plated |
| Spring | Stainless steel | |

General information:

1.Dimension shall be interpreted per ASME Y14.5-2009

2.Stripping length : 10mm

3.Operating temperature: -40°C~+105°C

4.RoHS Compliance

5.Undimensioned Tolerances:

| Pitch Range In mm | | | Nominal Dimension Range In mm | | | | | — ⌒ ⌭ |
|---|---|---|---|---|---|---|---|---|
| TO 6 | Over 6 TO 10 | Over 10 TO 24 | TO 30 | Over 30 TO 60 | Over 60 TO 100 | Over 100 TO 150 | Over 150 | 0.1/10 |
| | | | | | | | | ∠ |
| ±0.15 | ±0.20 | ±0.30 | ±0.30 | ±0.50 | ±0.70 | ±1.00 | ±1.30 | ±2° |

HOW TO ORDER:

TC2.5-2-1-XX

Sereies No.

Color:
GY: Grey
BU: Blue
OG: Orange

| | | | | | | | | |
|---|---|---|---|---|---|---|---|---|
| 订货号 Order No. | TC2.5-2-1-XX | | 名称 Name | TC系列笼式弹簧 2.5mm² 一针一线 插拔式接线端子 | 未注公差 Tolerance | | 表面 Surfaace | |
| 项目 Item | 签字 Signature | 日期 Date | | | Tolerances Table | | VDI21 | |
| 设计 Design | dfz | 01/06/20″ | 图号 Drawing No. | PRM001079 | 阶段标记 Progress | 版本 Revision | 重量 Weight | 比例 Scale |
| 审核 Check | cw | 01/06/20″ | 材料 Material | Notes | M | 1 | / | 1:1 |
| 工艺 Process | - | - | 物料号 Item No. | 412141001 | 第1页/共1页 1 of 1 | | mm | |
| 标准化 Unify | - | - | | 412141002 | SUPU 宁波速普电子有限公司 NINGBO SUPU ELECTRONICS CO.,LTD. | | | |
| 批准 Approve | lwl | 01/06/20″ | | 412141003 | | | | |

借通用件登记 Common Part

原图号 Old Draw. No.

底图总号 Assembly No.